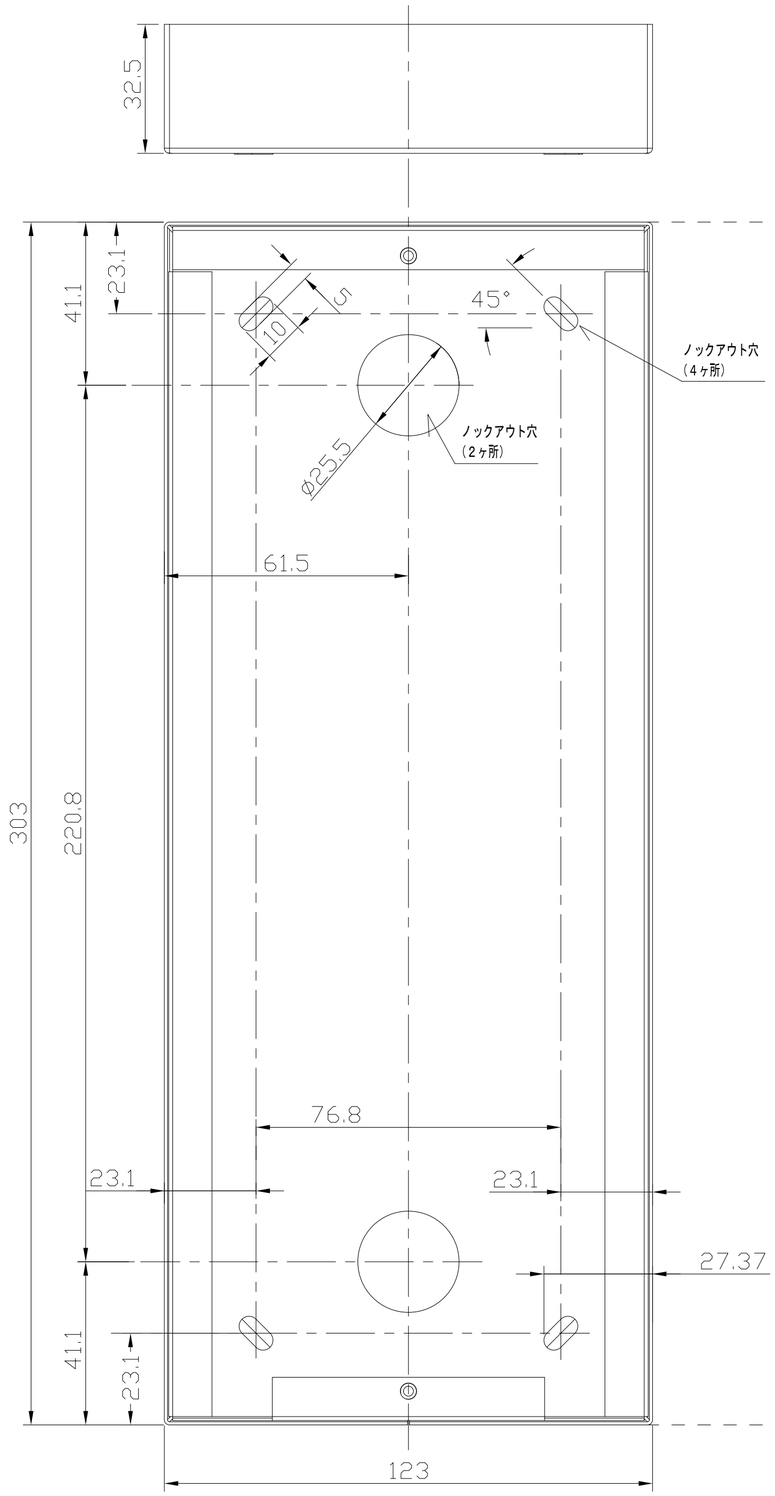

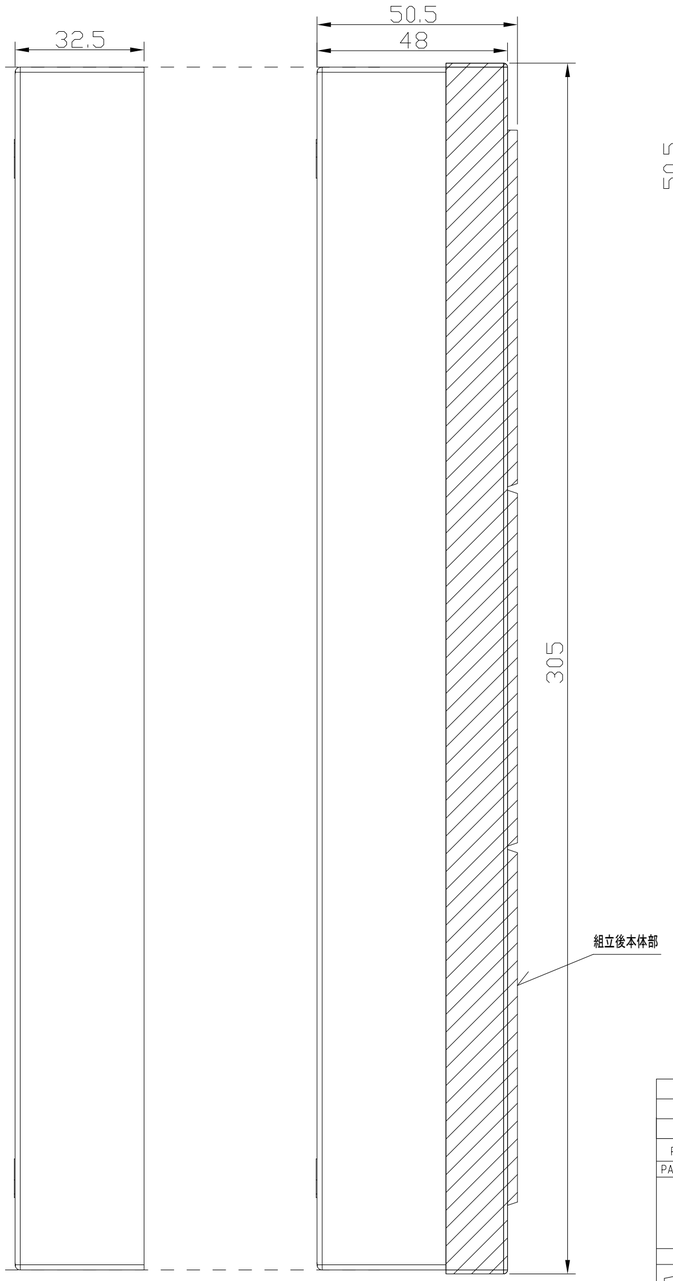

組立後の全体寸法
(側面図)

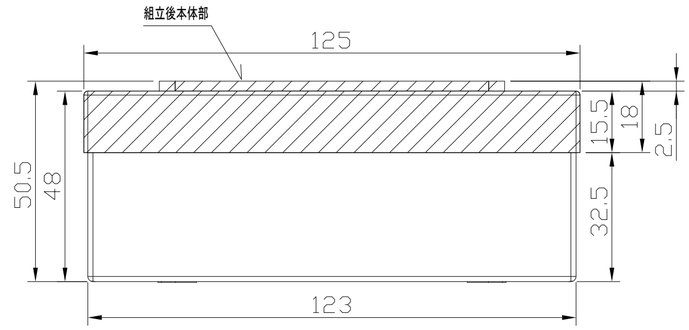

組立後の全体寸法
(上面図)

REV	CHANGE DESCRIPTION	DESIGNED	DATE	CHECKED

PARTS MUST BE ROHS COMPLIANT

PART DESCRIPTION

SERIES DESCRIPTION

MATERIAL

P/N MATERIAL

COLOUR

NOTE-FINISHING & TREATMENT

GENERAL TOLERANCE

DIMENS.FROM	1	25	50	100	150	200	400	1°
TO	25	50	100	150	200	400	800	360°
Tolerance ±	0.1	0.2	0.3	0.5	0.6	0.8	1.2	20'

SCALE 1:1

MOULD NO.

PART CAVITY :
TOTAL CAVITIES :

PART WEIGHT : [.1] g

DESIGNED	APPROVED	DATE	PROJECT STATUS	DRAWING NO.	REV
				3316/3	