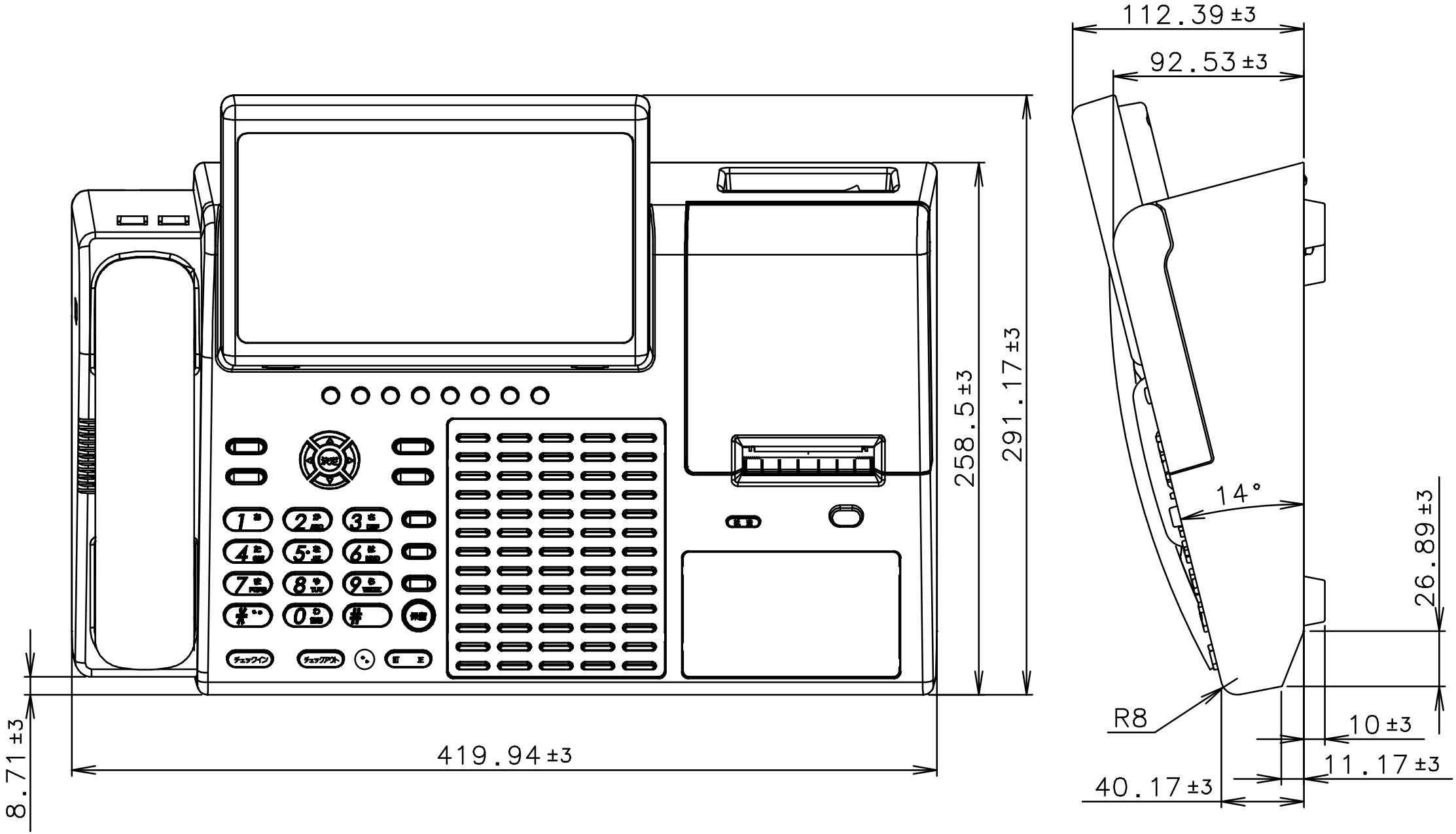
112.39±3
92.53±3
258.5±3
291.17±3
14°
26.89±3
R8
10±3
11.17±3
40.17±3
8.71±3
419.94±3